Specification

PRODUCT MODEL #: X-TR014-14-YYZZ-UU

PRODUCT NAME: DIM 1LED 14W WATER-DROP TRACK LIGHT

GENERAL GUIDELINES 2
- Products Description 2
- Characteristics 2
- Features 2

OPTICAL & LED 3
- Integrating Sphere 3
- Photometric 3
- LED 9
- Others 9

ELECTRICAL 9
- Power supply 9
- Others 9

MECHANICAL & THERMAL MANAGEMENT 10
- Mechanical Dimension 10
- Heat test reports 10
- Others 10

CERTIFICATION & ENERGY LABELING 11

Track light accessary 11

PACKAGING 11

DIMMING COMPATIBILITY 13

INSTALLATION INSTRUCTION 14

WARRANTY 16

GENERAL GUIDELINES

Products Description

Precise and variable accent lighting in the shop and retail sector. The water-drop design inspired by Action Movie Star Bruce Lee's "BE LIKE WATER". The water-drop design is unique and patented, which it's beautiful and self-cleaning. Nearly 50% energy saving compare to ceramic metal halide thanks to the high efficacy over 90lm per watt. CRI82 and CRI95 options and within 4-step MacAdam ellipses offer high quality lights for high end application.

ETL, DLC and RoHS compliant.

Characteristics

- Input Power(W): 14W
- Input Voltage(VAC): 120V
- Power Factor: 0.9
- Optional Beam Angle(°): 15°, 24°,40°, 60°
- Lifespan (hrs): 50,000hr
- Base: 3 wire 1 circuit
- Dimming: Triac dimming(leading & Trailling)
- Lumen Output & CRI:

CCT (K)	**Lumen Output @CRI 82** (lm)	**Lumen Output @CRI 95** (lm)
2700	1310	865
3000	1342	985
4000	1371	1070
5000	1437	1152

- Finish Color:

Matt White	**Matt Black**	**Matt Silver**	**Texture White**	**Texture Black**	**Bright White**	**Others**
X	X	X				

Features

✓ Interchangeable Beam: 15°, 24°, 40°, 60°

- ✓ CAMETA anti-glare design and with shielding angle to reduce wide beam angle glare lights
- ✓ High efficacy: 90lm/W
- ✓ Dimmable: compatible with most of the dimmers in the market
- ✓ Integral driver, isolated circuit
- ✓ Passive cooling achieved by innovative thermal design
- ✓ 350°rotation (horizontal), 90° adjustable(vertical)
- ✓ Self-cleaning thanks to the water drop shape

OPTICAL & LED

Integrating Sphere

Data sheet below measured by EVERFINE HAAS-1200 according to CIE 1931. At Ta=25°C, initial testing.

- 3000K CRI82 Integrating Sphere Test Reports

Color Parameters:

Chromaticity Coordinate:x=0.4435 y=0.4126/u'=0.2512 v'=0.5257

CCT=2960K(Duv=0.0025) Dominant WL:Ld =582.2nm Purity=57.0%

Ratio:R=23.0% G=74.7% B=2.3% Peak WL:Lp=607.0nm FWHM=134.3nm

Render Index:Ra=82.8

R1 =81 R2 =89 R3 =97 R4 =81 R5 =80 R6 =87 R7 =85

R8 =62 R9 =11 R10=75 R11=80 R12=68 R13=83 R14=98 R15=74

Photometric

Data sheet below measured by sensing GMS-1800 according to CIE or IESNA. At Ta=35°C, initial testing.

Claimed Beam Angle(°)	**15**	**24**	**40**	**60**
Measured Beam(°)	18.7	21.2	32.6	57.6

CBCP @3000K Ra82(cd)	6323	6385	2733	946
CBCP @3000K Ra95(cd)	6117	6210	2251	827

- 3000K CRI82 15° Photometric Test Reports

A:Light Distribution Curve

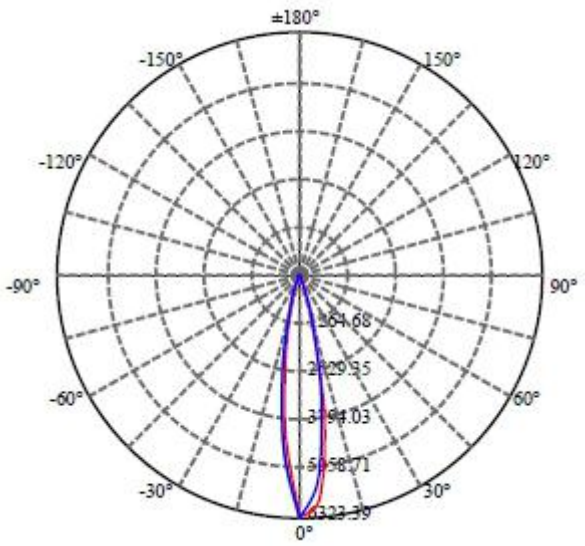

B:LUX Distance Curve

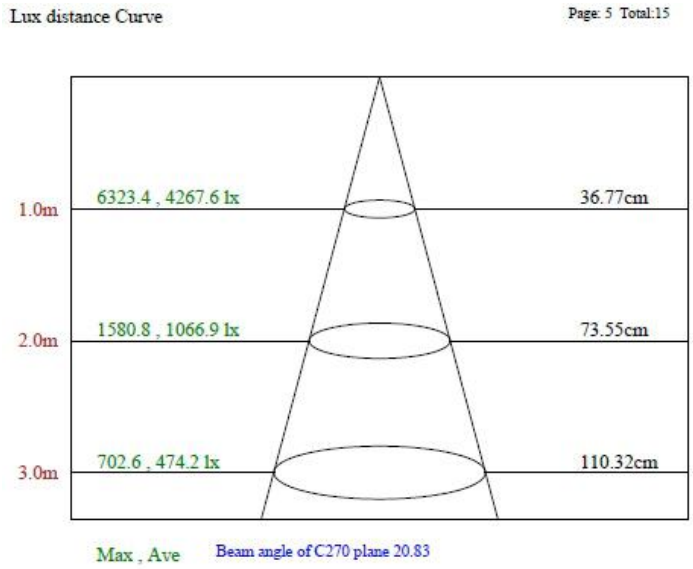

C:UGR Glare

UGR Glare

Illumination assessment according UGR											
Rf of Ceiling		70	70	50	50	30	70	70	50	50	30
Rf of Wall		50	30	50	30	30	50	30	50	30	30
Rf of Floor		20	20	20	20	20	20	20	20	20	20
Room dimensions		Viewed crosswise					Viewed endwise				
X	Y										
2H	2H	16.20	17.09	16.82	17.70	18.38	16.29	17.19	16.92	17.79	18.48
	3H	17.34	18.14	17.98	18.76	19.48	17.41	18.21	18.05	18.83	19.56
	4H	17.59	18.34	18.25	18.97	19.71	17.66	18.41	18.32	19.04	19.79
	6H	17.70	18.39	18.37	19.03	19.78	17.77	18.46	18.44	19.11	19.86
	8H	17.71	18.36	18.39	19.02	19.75	17.78	18.43	18.46	19.10	19.82
	12H	17.74	18.37	18.42	19.02	19.80	17.81	18.44	18.49	19.09	19.87
4H	2H	16.56	17.31	17.23	17.94	18.69	16.67	17.42	17.34	18.06	18.80
	3H	17.84	18.46	18.50	19.13	19.89	17.93	18.55	18.60	19.23	19.98
	4H	18.15	18.72	18.83	19.40	20.19	18.24	18.81	18.92	19.49	20.28
	6H	18.23	18.78	18.99	19.48	20.28	18.32	18.87	19.07	19.57	20.37
	8H	18.31	18.78	19.02	19.48	20.29	18.40	18.87	19.10	19.56	20.37
	12H	18.35	18.77	19.07	19.49	20.31	18.43	18.85	19.16	19.58	20.39
8H	4H	18.18	18.65	18.89	19.35	20.16	18.28	18.75	18.98	19.44	20.25
	6H	18.37	19.95	19.10	19.50	20.32	18.46	20.05	19.20	19.60	20.41
	8H	18.43	18.80	19.18	19.54	20.37	18.53	18.89	19.28	19.64	20.47
	12H	19.18	19.51	19.92	21.22	21.13	19.27	19.61	20.01	21.31	21.23
12H	4H	18.13	18.55	18.85	19.28	20.09	18.23	18.65	18.95	19.38	20.19
	6H	18.69	18.70	19.08	19.41	20.28	18.79	18.80	19.18	19.51	20.38
	8H	18.42	18.76	19.17	19.49	20.38	18.52	18.86	19.27	19.59	20.48
Variation with the observer position at spacings:											
S = 1.0H		0.4/-0.4					0.4/-0.5				
S = 1.5H		0.9/-0.9					0.8/-1.0				
S = 2.0H		1.7/-1.2					1.7/-1.5				
Standard tables:		BK3					BK3				
Uncorrected UGR		2.7					2.0				

- 3000K CRI82 24° Photometric Test Reports

A:Light Distribution Curve

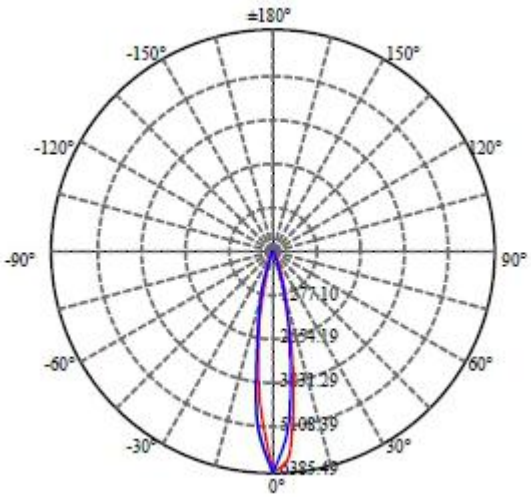

B:LUX Distance Curve

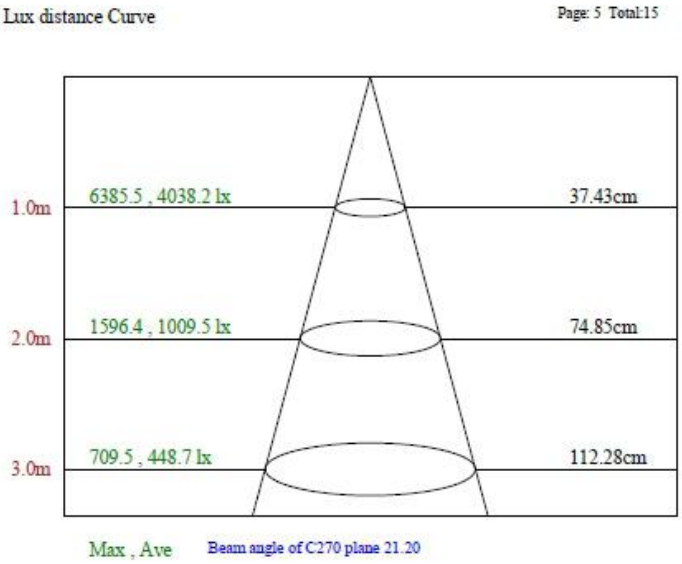

C:UGR Glare

UGR Glare

Illumination assessment according UGR											
Rf of Ceiling		70	70	50	50	30	70	70	50	50	30
Rf of Wall		50	30	50	30	30	50	30	50	30	30
Rf of Floor		20	20	20	20	20	20	20	20	20	20
Room dimensions		Viewed crosswise					Viewed endwise				
X	Y										
2H	2H	13.60	14.48	14.19	15.05	15.68	13.59	14.47	14.18	15.04	15.67
	3H	14.31	15.09	14.91	15.67	16.35	14.31	15.09	14.91	15.67	16.35
	4H	14.49	15.23	15.11	15.82	16.51	14.49	15.23	15.11	15.82	16.51
	6H	14.57	15.25	15.20	15.86	16.55	14.57	15.25	15.20	15.86	16.55
	8H	14.57	15.22	15.22	15.84	16.52	14.57	15.22	15.22	15.84	16.52
	12H	14.59	15.21	15.24	15.83	16.56	14.59	15.21	15.24	15.83	16.56
4H	2H	13.73	14.47	14.36	15.07	15.76	13.74	14.48	14.37	15.07	15.76
	3H	14.61	15.23	15.25	15.86	16.57	14.62	15.24	15.26	15.88	16.58
	4H	14.86	15.42	15.51	16.07	16.81	14.87	15.43	15.52	16.08	16.81
	6H	14.93	15.46	15.65	16.13	16.88	14.94	15.47	15.66	16.14	16.89
	8H	15.00	15.46	15.68	16.13	16.88	15.01	15.47	15.69	16.13	16.89
	12H	15.03	15.45	15.73	16.14	16.90	15.04	15.46	15.74	16.15	16.91
8H	4H	14.87	15.33	15.55	16.00	16.75	14.88	15.34	15.56	16.00	16.76
	6H	15.04	16.43	15.74	16.14	16.90	15.05	16.44	15.75	16.15	16.91
	8H	15.11	15.46	15.83	16.18	16.95	15.12	15.47	15.84	16.19	16.96
	12H	15.74	16.06	16.45	17.58	17.60	15.75	16.08	16.46	17.59	17.62
12H	4H	14.82	15.23	15.51	15.93	16.69	14.83	15.24	15.52	15.94	16.70
	6H	15.34	15.36	15.73	16.05	16.86	15.35	15.37	15.74	16.06	16.87
	8H	15.10	15.43	15.81	16.12	16.97	15.11	15.44	15.83	16.14	16.98
Variation with the observer position at spacings:											
S = 1.0H		0.8/-0.7					0.6/-0.7				
S = 1.5H		1.4/-1.4					0.9/-1.6				
S = 2.0H		3.5/-2.1					3.1/-2.4				
Standard tables:		BK2					BK2				
Uncorrected UGR		-0.8					-1.2				

- 3000K CRI82 40° Photometric Test Reports

A:Light Distribution Curve

B:LUX Distance Curve

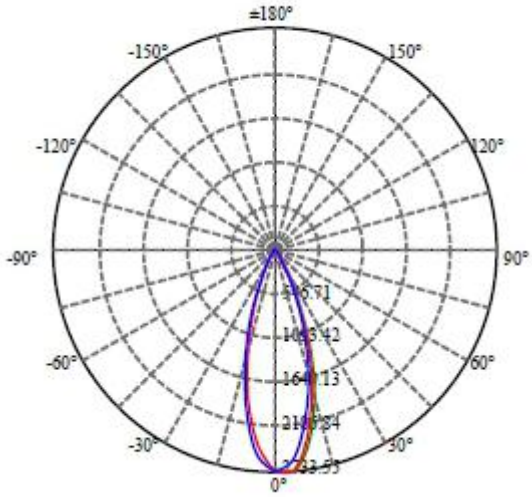

Lux distance Curve

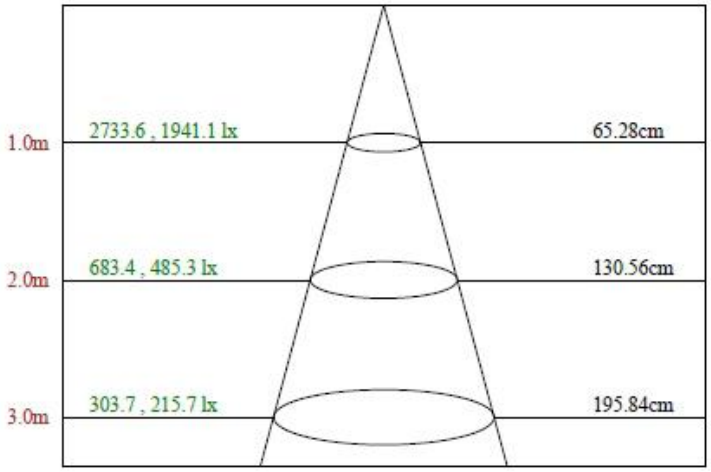

Max , Ave Beam angle of C45 plane 36.06

C:UGR Glare

UGR Glare

Illumination assessment according UGR											
Rf of Ceiling		70	70	50	50	30	70	70	50	50	30
Rf of Wall		50	30	50	30	30	50	30	50	30	30
Rf of Floor		20	20	20	20	20	20	20	20	20	20
Room dimensions		Viewed crosswise					Viewed endwise				
X	Y										
2H	2H	12.61	13.45	13.22	14.04	14.70	12.76	13.59	13.37	14.18	14.85
	3H	13.56	14.30	14.19	14.91	15.61	13.70	14.45	14.33	15.05	15.76
	4H	13.89	14.58	14.54	15.20	15.92	14.03	14.73	14.68	15.34	16.06
	6H	14.14	14.78	14.80	15.41	16.14	14.28	14.92	14.94	15.55	16.28
	8H	14.23	14.83	14.90	15.48	16.19	14.36	14.96	15.03	15.61	16.32
	12H	14.36	14.94	15.04	15.58	16.34	14.49	15.06	15.16	15.70	16.46
4H	2H	12.81	13.50	13.46	14.12	14.84	13.02	13.72	13.68	14.33	15.06
	3H	13.95	14.53	14.61	15.19	15.92	14.16	14.74	14.82	15.40	16.13
	4H	14.39	14.91	15.06	15.57	16.34	14.60	15.12	15.27	15.78	16.55
	6H	14.64	15.13	15.38	15.82	16.61	14.84	15.33	15.58	16.02	16.81
	8H	14.82	15.25	15.52	15.93	16.72	15.01	15.44	15.71	16.12	16.91
	12H	14.98	15.36	15.70	16.07	16.86	15.16	15.54	15.88	16.25	17.04
8H	4H	14.47	14.89	15.17	15.58	16.37	14.71	15.13	15.41	15.81	16.60
	6H	14.89	16.35	15.62	15.97	16.76	15.11	16.57	15.84	16.19	16.98
	8H	15.11	15.43	15.85	16.16	16.97	15.31	15.63	16.06	16.37	17.18
	12H	15.81	16.10	16.55	17.73	17.69	16.01	16.30	16.74	17.93	17.89
12H	4H	14.44	14.82	15.15	15.53	16.32	14.67	15.05	15.39	15.76	16.56
	6H	15.14	15.21	15.64	15.92	16.76	15.37	15.43	15.86	16.14	16.98
	8H	15.16	15.45	15.89	16.17	17.04	15.36	15.65	16.10	16.37	17.25
Variation with the observer position at spacings:											
S = 1.0H		3.1/-1.5					2.4/-1.2				
S = 1.5H		4.8/-1.8					3.8/-1.7				
S = 2.0H		6.5/-2.3					5.5/-2.2				
Standard tables:		BK2					BK3				
Uncorrected UGR		-0.3					-0.8				

- 3000K CRI82 60° Photometric Test Reports

- **A:Light Distribution Curve**

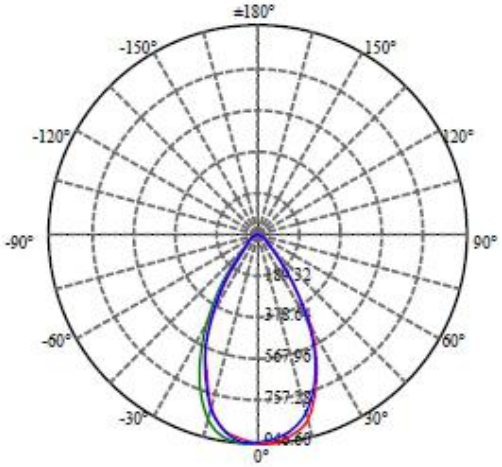

B:LUX Distance Curve

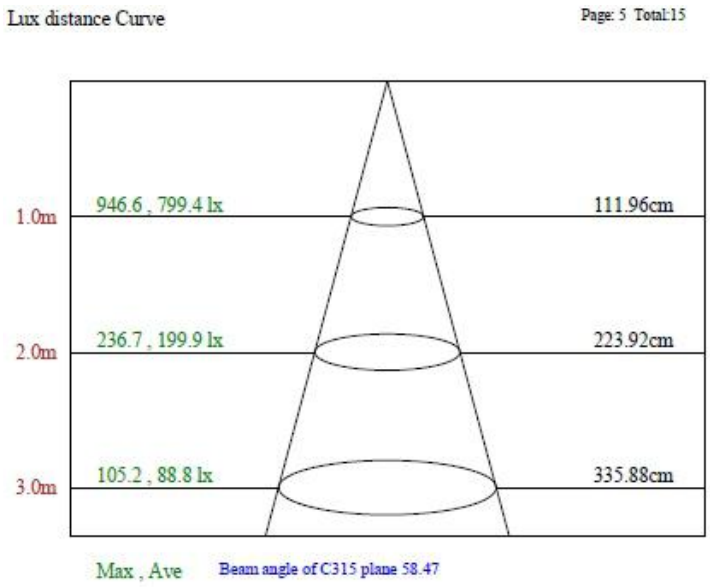

C:UGR Glare

Illumination assessment according UGR											
Rf of Ceiling		70	70	50	50	30	70	70	50	50	30
Rf of Wall		50	30	50	30	30	50	30	50	30	30
Rf of Floor		20	20	20	20	20	20	20	20	20	20
Room dimensions		Viewed crosswise					Viewed endwise				
X	Y										
2H	2H	18.34	19.22	19.02	19.88	20.64	18.41	19.29	19.08	19.95	20.71
	3H	19.60	20.38	20.29	21.05	21.85	19.65	20.43	20.33	21.10	21.89
	4H	20.02	20.75	20.73	21.43	22.25	20.07	20.80	20.77	21.48	22.29
	6H	20.36	21.03	21.08	21.73	22.55	20.40	21.07	21.12	21.77	22.59
	8H	20.48	21.12	21.21	21.83	22.62	20.52	21.15	21.24	21.86	22.65
	12H	20.64	21.25	21.37	21.95	22.80	20.68	21.28	21.41	21.99	22.83
4H	2H	18.75	19.48	19.46	20.16	20.98	18.82	19.55	19.53	20.23	21.04
	3H	20.18	20.78	20.90	21.50	22.32	20.23	20.83	20.94	21.55	22.37
	4H	20.72	21.26	21.45	21.98	22.84	20.76	21.30	21.49	22.02	22.88
	6H	21.03	21.55	21.84	22.30	23.17	21.07	21.59	21.87	22.34	23.21
	8H	21.26	21.70	22.01	22.44	23.32	21.29	21.73	22.04	22.47	23.35
	12H	21.44	21.83	22.21	22.60	23.48	21.46	21.86	22.23	22.63	23.51
8H	4H	20.86	21.30	21.62	22.04	22.92	20.90	21.34	21.66	22.08	22.96
	6H	21.37	23.18	22.15	22.52	23.40	21.40	23.21	22.18	22.55	23.43
	8H	21.62	21.95	22.41	22.74	23.64	21.64	21.98	22.44	22.77	23.66
	12H	22.36	22.67	23.15	24.64	24.40	22.38	22.69	23.17	24.66	24.42
12H	4H	20.84	21.24	21.61	22.00	22.88	20.88	21.28	21.65	22.04	22.92
	6H	21.68	21.72	22.18	22.49	23.41	21.70	21.75	22.21	22.51	23.44
	8H	21.68	21.99	22.47	22.76	23.72	21.70	22.01	22.49	22.78	23.74
Variation with the observer position at spacings:											
S = 1.0H		2.1/-1.7					1.9/-1.6				
S = 1.5H		3.6/-1.9					3.3/-1.9				
S = 2.0H		5.3/-2.0					4.9/-2.1				
Standard tables:		BK2					BK3				
Uncorrected UGR		6.7					6.5				

LED

Original CREE Xlamp CXA1512 LED, within 4-step MacAdam ellipses, LM80 qualified.

Others

NA

ELECTRICAL

Power supply

■ Driver Input

Input Voltage (VAC)	Input Current (A)	Dimming Range	Power Factor	THDi (%)	Inrush Current (A)	MTBF (hrs)	Switching cycles	Starting Time (Ms)
120V	0.12	20%~80%	0.94	2.9	0.96	/	2~3Sec	500

Others

■ Hi-pot Test

No.	Hi-pot Voltage	Spec. of	Time	Leakage of	Result

		leakage		test	
Primary-Second	3750Vac	<10mA	60Sec	2mA	pass
Primary-FG	3750Vac	<10mA	60Sec	2mA	pass

- Protections: short-circuit protection, Under voltage protection, Output current Balance.

MECHANICAL & THERMAL MANAGEMENT

Mechanical Dimension

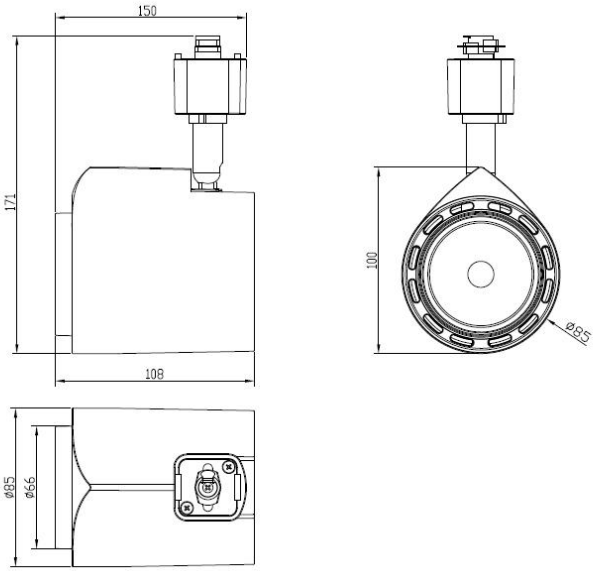

Heat test reports

Test condition test under a enclosed constant chamber(about L 0.5*W 0.5*H 0.6m).

Ta(°C)	Tc_{LED}(°C)	LED CAL L70 life (hrs)	Tc_{Driver}(°C)	$Tc_{Luminarie}$(°C)	$Tc_{Capacitor}$(°C)	Driver CAL life (hrs)
40	80	50000	70	70	93	50000

Others

IP20: suitable for dry location use only; IK: NA

Glow-wire test: 650°C

Audible noise level: NA

CERTIFICATION & ENERGY LABELING

Operating Temperature:-20°C~40°C

Storage Temperature:-40°C~70°C @humidity <78%

Use in dry location only, not suitable for use in totally enclosed.

Track light accessary

Barndoors

Honeycomb

Snoot

Oval snoot

PACKAGING

Unit Box	Length x Width x Height (cm)	18.2 X 14.0 X 11.0
	Net Weight (kg)	0.7
Inner Carton	Qty per carton	N/A
	Length x Width x Height (cm)	N/A
	Net Weight (kg)	N/A
Master Carton	Qty per carton	10

	Length x Width x Height (cm)	72.5 X 19.5X 24.0
	Cube Meter	33.93 X 10^3
	Net Weight (kg)	7.0
	Gross Weight (kg)	9.0

Packaging schemes

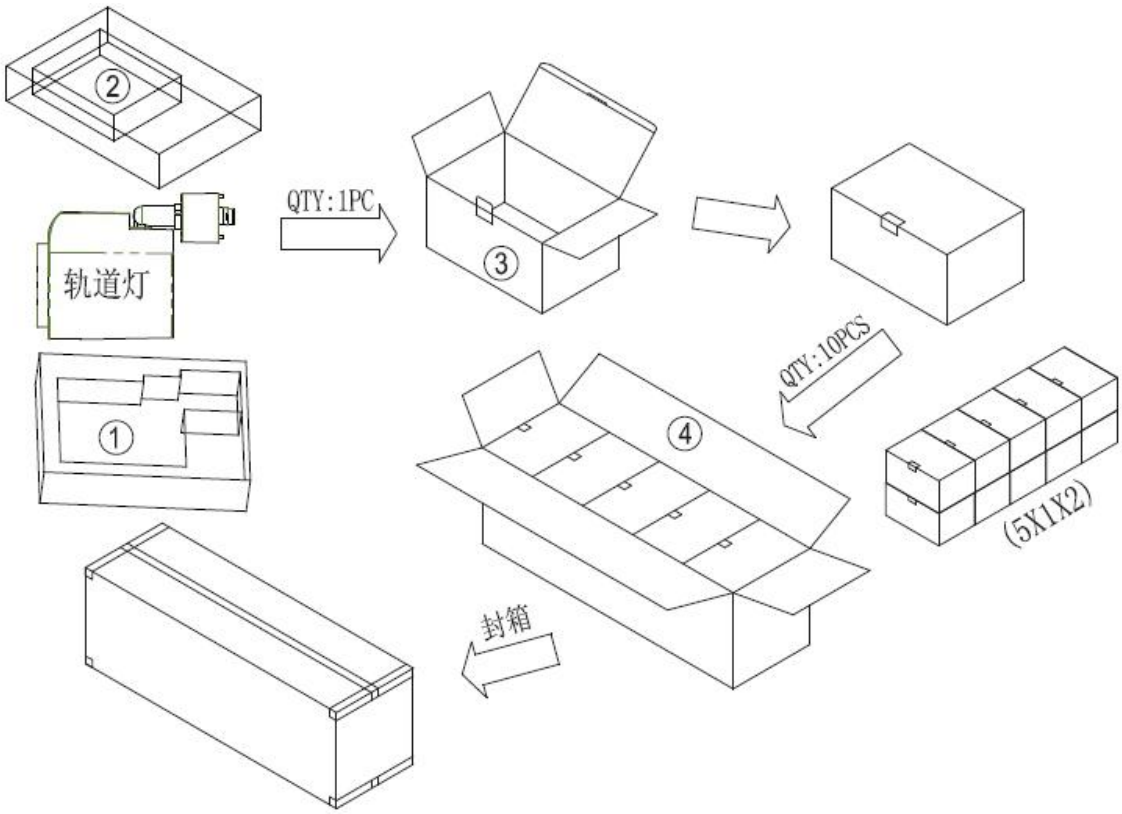

LUMINAIRE Galarneau

DIMMING COMPATIBILITY

#	Brand	Model	Power Rating (W)	Dimmer Input Voltage	Type	Switching Synchronism	Max# of Lamps/Dimmer 最大匹配多少个灯										Dimming Range
编码	品牌	型号	调光器最大功率	调光器输入电压	类型	开关同步性	1	2	3	4	5	6	7	8	9	10	调光范围
1	Lutron	S-600P	20-600W	AC120V/60Hz	T	B	OK	OK	OK	OK	OK	OK	OK	OK	OK	OK	20-100%
2																	
3																	
4																	
5																	
6																	
7																	
8																	
9																	
10																	
11																	
12																	

INSTALLATION INSTRUCTION

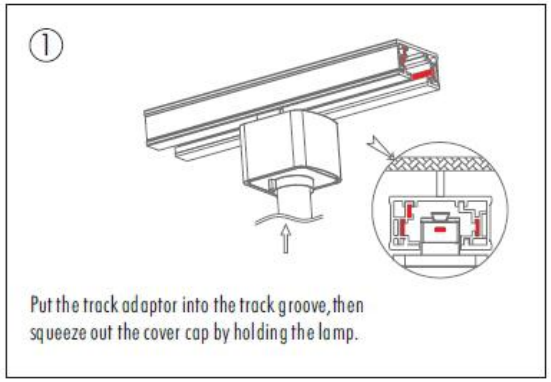

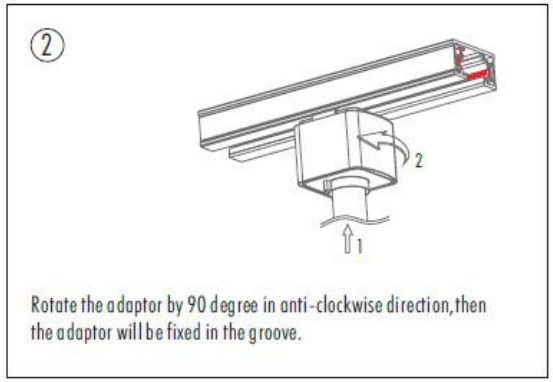

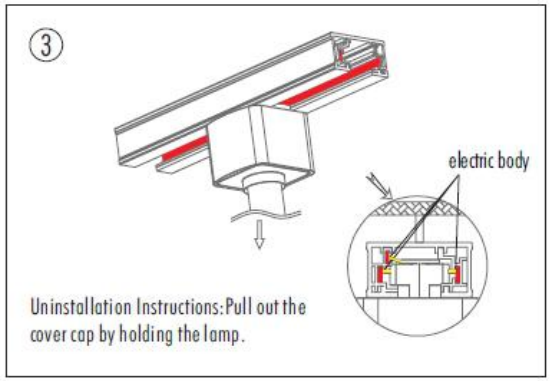

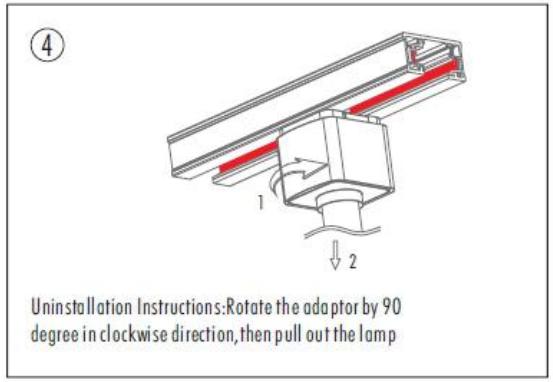

WEEE: Waste of Electrical and Electronic Equipment: Do not dispose of this luminarie with your normal household waste. Recycle where facilities exist. Please check with your retailer or local authority for suitable options.

LUMINAIRE Galarneau

The Installation instruction of LED track light accessories

Honeycomb

1. To power off, remove the original lamp.

2. Place the len face up, rotate the original lamp cover and take it, change into the honeycomb component and fix it.

3. Ensure that installtion is firm and reliable, then electrify to lighten.

Oval snoot

1. To power off, remove the original lamp.

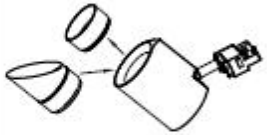

2. Place the len face up, rotate the original lamp cover and take it, change into the oval snoot component and fix it.

3. Ensure that installation is firm and reliable.

4. If need to rotate the angle of oval snoot, the oval snoot can be rotated right-hand alone, or pull out the oval snoot and adjust the angle,then to button up.

5. Ensure that installation is firm and reliable, then electrify to lighten.

Barn door

1. To power off, remove the original lamp.

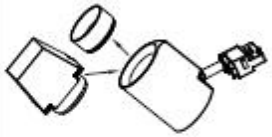

2. Place the len face up, rotate the original lamp cover and take it, change into the barn door component and fix it.

3. Ensure that installation is firm and reliable.

4. If need to rotate the angle of barn door, the barn door can be rotated right-hand alone, or pull out the oval snoot and adjust the angle,then to button up.

5. Ensure that installation is firm and reliable, adjust suitable angle, then electrify to lighten.

Snoot

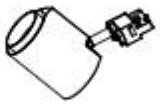

1. To power off, remove the original lamp.

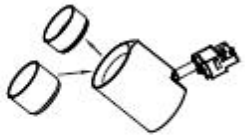

2. Place the len face up, rotate the original lamp cover and take it, change into the snoot component and fix it.

3. Ensure that installation is firm and reliable, adjust the suitable angle, then electrify to lighten.

LUMINAIRE Galarneau

WARRANTY

A. Warranty Terms

All luminaries (including the fixture and driver) from “Luminaire Galarneau” are limited warranted for five years from the date of production.

B. Special conditions

The warranty period starts on the date of production.
This warranty policy is only valid when products are properly installed and operated in application conditions as specified in the product data sheet.

C. Return Policy

Luminaire Galarneau will not accept returned items without prior notice.
Luminaire Galarneau will not be responsible for any costs or expenses caused by following conditions:

a. Product that has been modified by the user.
b. Product was not installed according to manual or specification.
c. Product was subject to unusual physical or electrical stress, misuse, or negligence.
d. Other damages caused after receipt of product by customer.

D. Return Procedure

To obtain approval of product return to Luminaire Galarneau, customer needs to follow our return procedures below:
a. Email the detailed information to sales who you contact. It should include the “Invoice number”, “Defective products quantity and items” and pictures, or video etc.
b. Returned product will be inspected upon arrival at the factory.
c. Luminaire Galarneau maybe will request samples delivery to factory for analysis.

VERSION #

#	MODIFICATIONS	Date.
1	Version 1: New create	2016.04.24
2	Version 2: Modified claimed beam angle, add track light accessory and installation	2016.05.16
3		
4		
5		
6		
7		
8		
9		
10		
11		
12		

Copyright 2016 by Luminaire Galarneau All rights reserved. The information in this document is subject to change without notice.